NO	DESCRIPTION	SIZE	Q'TY	REMARKS
1	A.F.V (ANSI300#)	2"	2	A. M. C
2	HARNOREG PILOT	3/4"	2	I. G. A
3	S.S.V (S-100)	2"	2	JEAVONS
4	Q/O FILTER (G2.0, HFV, 1MPa)	3"	2	SE JONG
5	D.P GAGUE (0-70kPa)	1/4"	2	I. G. A
6	RECORDER (1MPa-10kPa, 7D)	2PEN	1	SE JONG
7	J48KL RELIEF	2"	1	JEAVONS
8	PRESSURE GAUGE (0-1MPa, SUS)	∅100	1	WOO JIN
9	PRESSURE GAUGE (0-10kPa, SUS)	∅100	1	WOO JIN
10	BALL VLAVE (1MPa)	2"	4	K. P. C
11	BALL VALVE (1MPa)	4"	2	K. P. C
12	GLOBE VALVE (2MPa)	2"	1	G. H
13	TURBO FUSER	4"	2	SE JONG

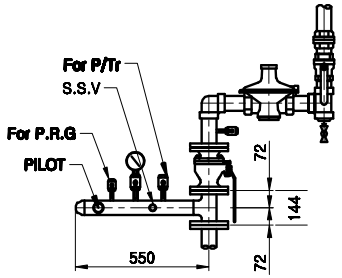

DETAIL:"B" SENSING HEADER

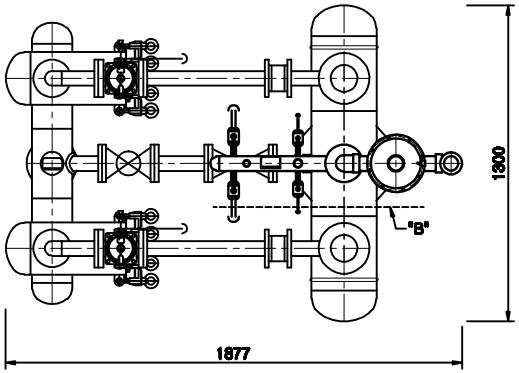

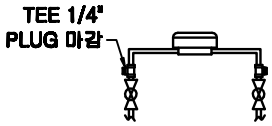

DETAIL: "A" (S=1:2)

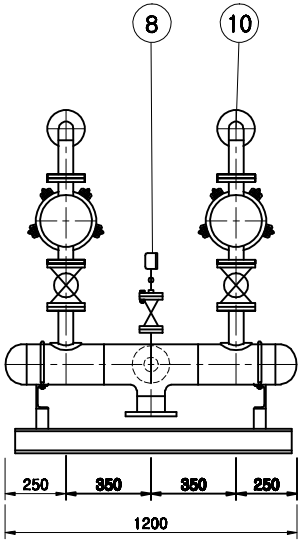

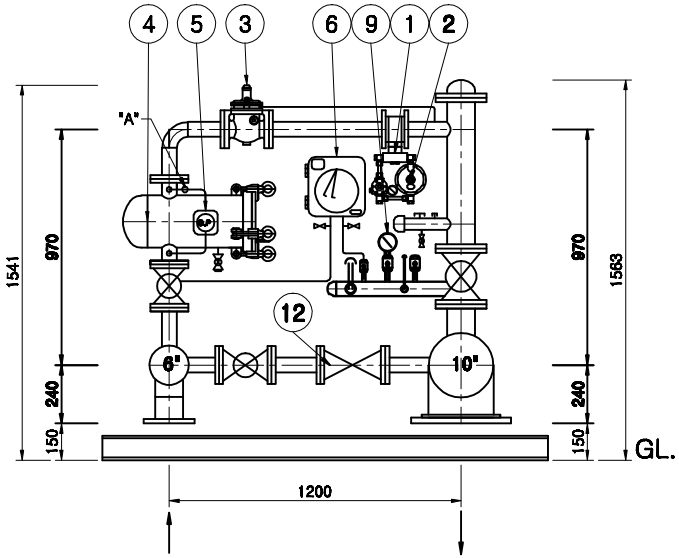

INLET 4"

OUTLET 10"

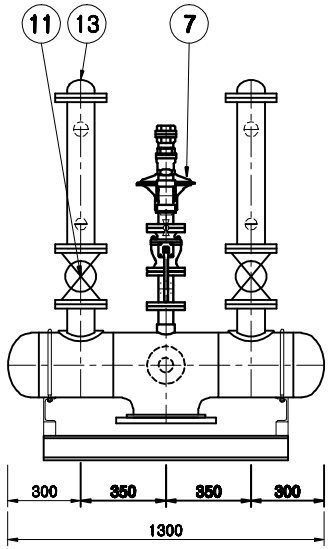

DWG: K.S.K	PROJECT TITLE	YESCO 지역정압기			DATE	SCALE	P/SCALE	DWG NO.
DES:	DATE	REVISION	DWG	DES	CHK	2005.01.20	1/15	A-2	KD0105032
CHK:						TITLE	AFV-2DHL-N GOVERNOR STATION	
APPD:						SAMCO	世宗에이엠씨株式會社 SEJONG-AMC CORPORATION	